EXHIBIT

tabbies

20-10 A

The Town of Elsmere

11 Poplar Avenue, Elsmere, Delaware 19805
Phone (302) 998-2215 Fax (302) 998-9920

Application for Hearing

☐ **Board of Adjustment**
☑ **Planning Commission**

Petition # 20-10 Filing Fee: ✓ Date Received 5/7/2020 Received by: SA

Subject Property: 109 WASHINGTON AVE Elsmere, DE 19805

Property is: ☑ Residential ☐ Commercial

Tax Parcel # 19 00100030 Zoning District: 19 R1

Applicant name:
Thomas J. Manuel Jr

Address: 109 Washington Ave Telephone # (302) 540-6198

City: Elsmere State: DE Zip Code: 19805

Application for Zoning Variance Related to: _____

☐ Front yard setback
☐ Rear yard setback
☐ Side yard setback
☐ Lot Area
☒ Lot Coverage
☐ Fencing
☐ Parking requirements
☐ Signage

Application for Special Exception Use Permit for the following use: _____

_____

Application for Appeal of an Administrative decision: _____

By: _____ Date: _____

For the following reasons: _____

_____

EXHIBIT
tabbies
20-10 B

Application for relief other than above: _____

State reasons for this request: I want to build a covered porch/gazebo on my property. Since this will create additional impervious area a hearing is required.

Has a previous application for this property been filed with the Town? ☐ Yes ☑ No

If yes, Petition # _____

If the applicant is not the Legal Owner of the property:

Legal owner information:

Name:

Address: _____ Telephone # _____

City: _____ State: _____ Zip Code: _____

Please submit the following with this petition:

- A copy of a plot plan showing the following: location of the property; a diagram showing the layout, size, and location of existing structures on the property.
- A copy of any deed restrictions on the property.
  NOTE: THE BOARD OF ADJUSTMENT OR PLANNING COMMISSION CANNOT APPROVE ANY APPLICATION PROHIBITED BY DEED RESTRICTIONS.
- Filing fee, payable to the Town of Elsmere.

The undersigned hereby certifies that the legal owner of the subject property is aware of, and agrees to the filing of this application, that the information submitted herein is correct, and agrees to be bound by any decision of the Town of Elsmere Board of Adjustment with respect to the subject property.

NOTE: The legal owner and his/her authorized representative must sign this form.

Applicant's Signature: [signature] Date: 5/6/20

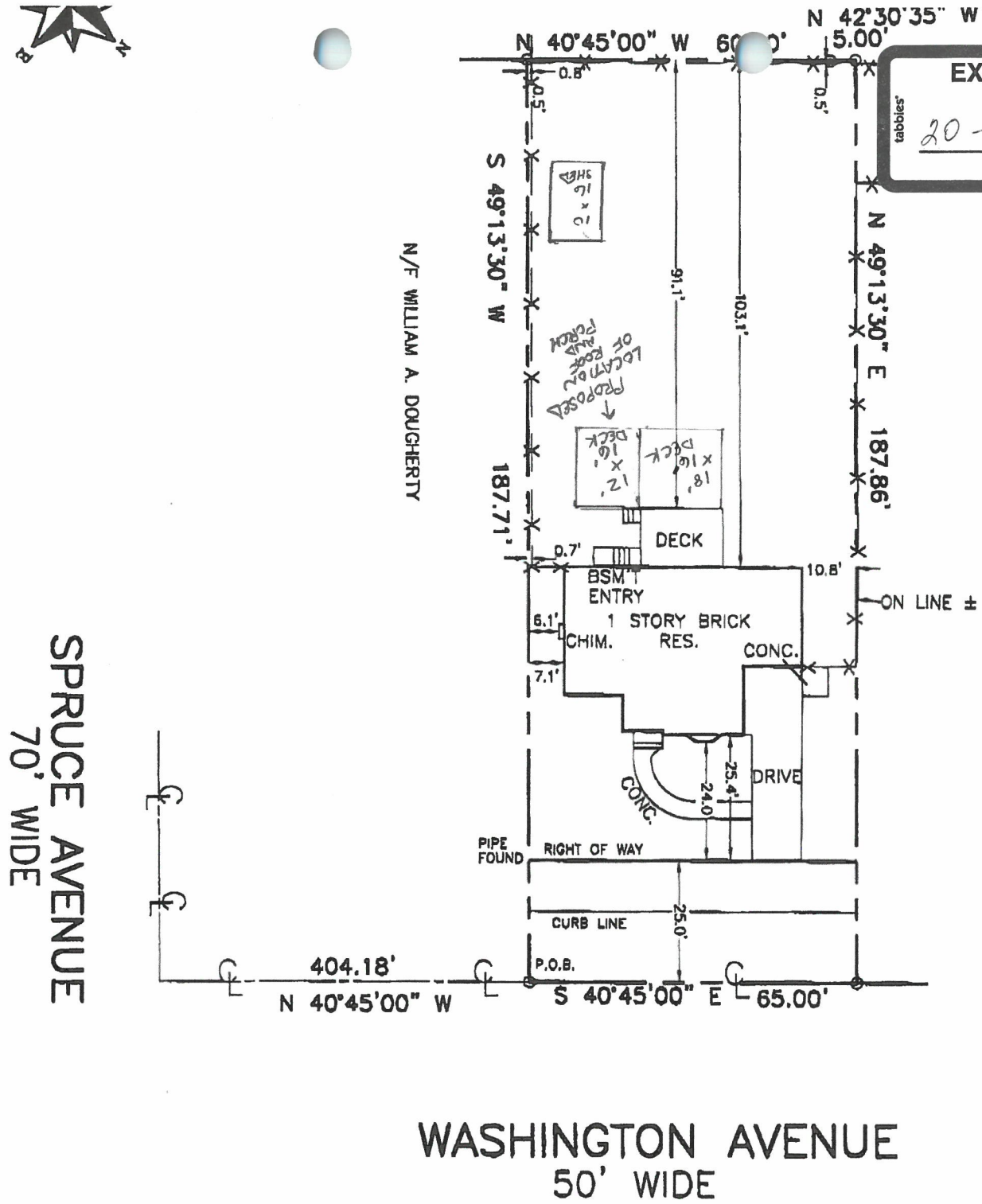

DEED REFERENCES:
BK. 475, PG. 292 &
BK. 518, PG. 321

REVISED 8/28/17

I HEREBY DECLARE THAT THE IMPROVEMENTS SHOWN HEREON HAVE BEEN LOCATED. THIS PLAN IS INTENDED FOR THE USE OF THE PARTIES INVOLVED WITH THIS LAND TRANSACTION AND SHALL NOT BE REPRODUCED OR USED FOR ANY OTHER PURPOSE, INCLUDING FUTURE IMPROVEMENTS AND DETERMINING PROPERTY LINES, TREES, LANDSCAPING OR OTHER FEATURES HAVE NOT BEEN LOCATED UNLESS SHOWN HEREON. PROPERTY IS SUBJECT TO ANY AND ALL RESTRICTIONS AND EASEMENTS OF RECORD. THE ZONING CLASSIFICATION SHOWN HEREON REPRESENTS CURRENT ZONING AS OF THE DATE OF THIS PLAN. THE MINIMUM REQUIREMENTS ARE FROM THE ZONING CODE. ANY RESTRICTION LINES SHOWN ABOVE ARE FROM THE RECORD PLAN OR DEED RESTRICTIONS PROVIDED TO A.E.S. SURVEYORS. ANY VARIANCES, AGREEMENTS OR PRIOR ZONING ARE NOT KNOWN UNLESS SHOWN HEREON.
IN ACCORDANCE TO THE DELAWARE BOARD OF PROFESSIONAL LAND SURVEYORS REGULATION 12.7; A WAIVER NOT TO SET CORNERS HAS BEEN OBTAINED IF THIS DRAWING DOES NOT CONTAIN AN ORIGINAL RAISED IMPRESSION SEAL IT IS NOT IN COMPLIANCE WITH REGULATIONS AND CAN ONLY BE USED FOR REVIEW PURPOSES.

PROPERTY TO BE CONVEYED TO:
THOMAS JERRY MANUEL, JR. & KAYCI MAE MANUEL

MORTGAGE SURVEY PLAN
109 WASHINGTON AVENUE

OAK GROVE

ZONED: R-1 (BUILT IN 1955)
SETBACKS:
FRONT- 20'
REAR- 30'
SIDE- 5'

A.E.S. SURVEYORS
3913 OLD CAPITOL TRAIL
WILMINGTON, DE 19808

BUILDING SUBCODE
TECHNICAL SECTION

Date Received
Date Issued
Control #
Permit #

PPLICANT: COMPLETE ALL APPLICABLE INFORMATION. WHEN CHANGING FY THIS OFFICE.

Lot

WASHINGTON AVE. Elsmere, DE 19805
Thomas MANUEL Jr
WASHINGTON AVE
Elsmere, DE 19805
(302) 540-6198
homeowner

Fax

D. TECHNICAL SITE DATA

DESCRIPTION OF WORK

To build a covered screened-in gazebo/porch on top of an existing deck.
Structure will be 12' x 16' with a hip roof.
All material will be treated lumber with a shingle roof.

ce Use Only)

	Date	Initial	INSPECTIONS Type:	Failure	Dates (Month/Day) Failure	Approval	Initial
ed			Footing				
			Foundation				
			Slab				
			Frame				
			Barrier-Free				
ired:			Insulation				
[ ] Fire [ ] Elevator			Finishes				
L			Energy				
CO [ ] CA			Mechanical				
			TCO				
			Other				
			Final				
			Barrier-Free				

TYPE OF WORK

- [x] New Building
- [ ] Addition
- [ ] Alteration
  - [ ] Roofing
  - [ ] Siding
  - [ ] Fence _____ Height (exceeds 6')
  - [ ] Sign _____ Sq. Ft.
  - [ ] Pool
  - [ ] Asbestos Abatement
  - [ ] Lead Haz. Abatement
  - [ ] Other _____
- [ ] Demolition

FEE (Office Use Only)

$

Administrative Surcharge $
Minimum Fee $
Fee $
TOTAL FEE $

TERISTICS

t	Proposed X	
t	Proposed X	
1		
14		Ft
192		Sq. Ft
s 192		Sq. Ft
2016		Cu. Ft
ed Ø		Sq. Ft

Est. Cost of Bldg. Work:

1. New Bldg. $ 1500.00
2. Alteration $ —
3. Total (1+2) $ 0.00 1500.00

C. CERTIFICATION IN LIEU OF OATH

I hereby certify that I am the (agent of) owner of record and am authorized to make this application.

Signature

1 White = Inspector Copy
2 Canary = Office Copy
3 Pink = Office Copy

tabbies
EXHIBIT
20-10 D

EXHIBIT
tabbies
20-10 E

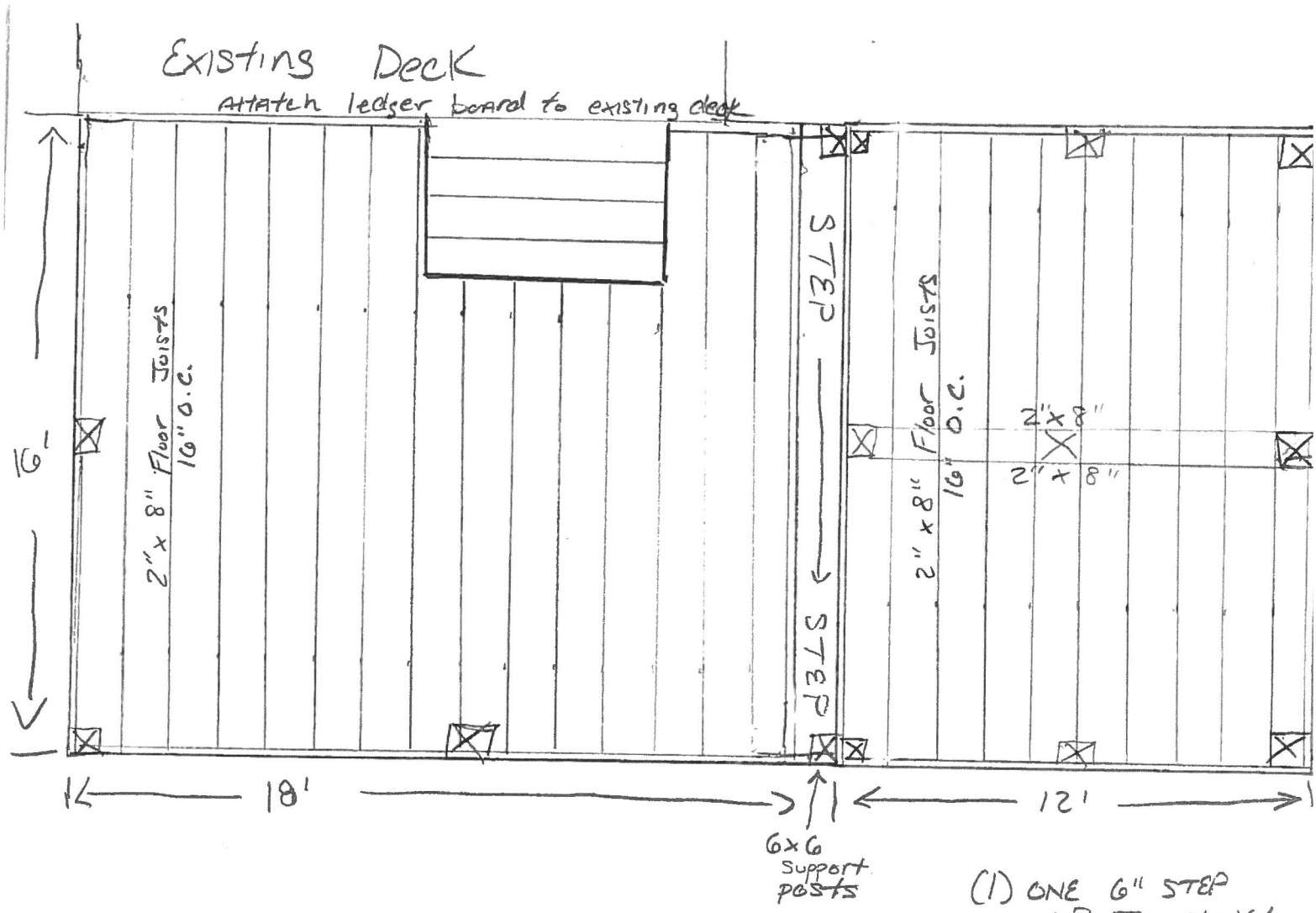

(1) ONE 6" STEP UP TO 12'x16' DECK.

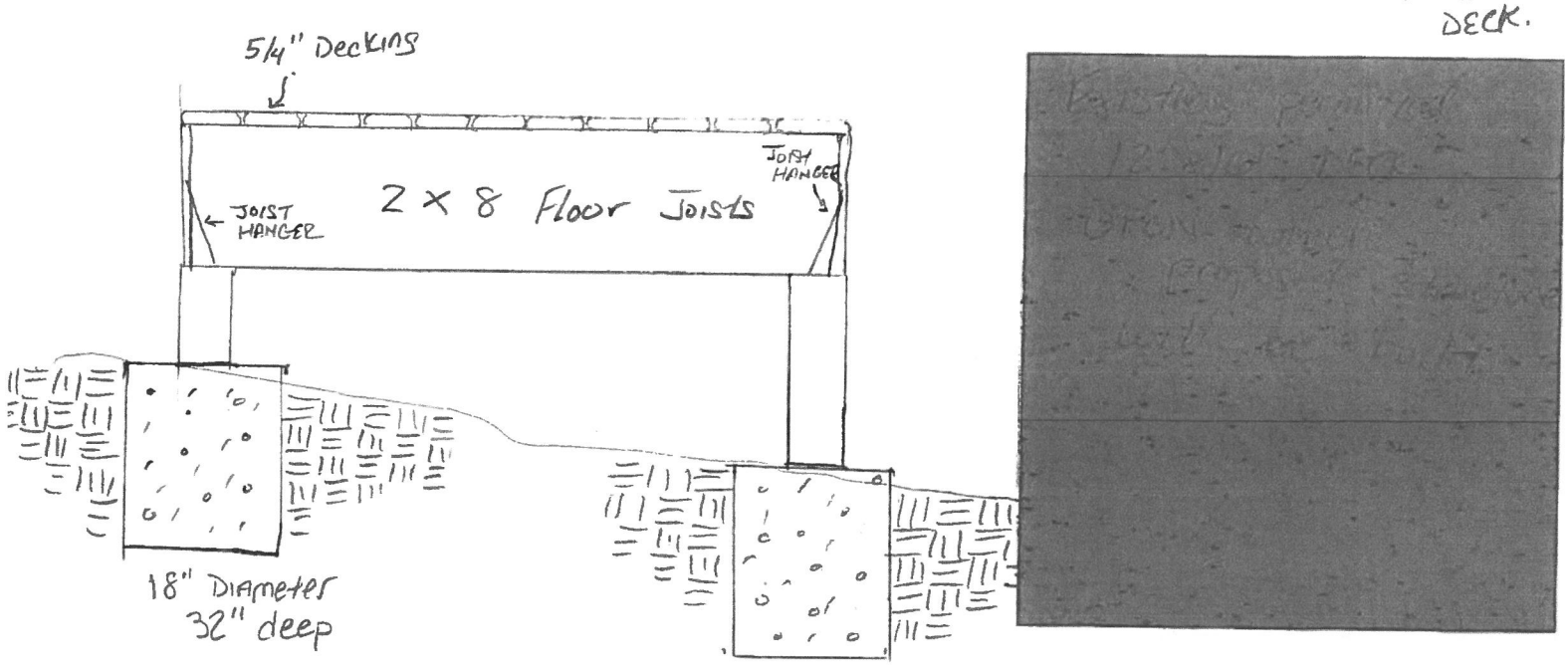

EXHIBIT

20-10 F

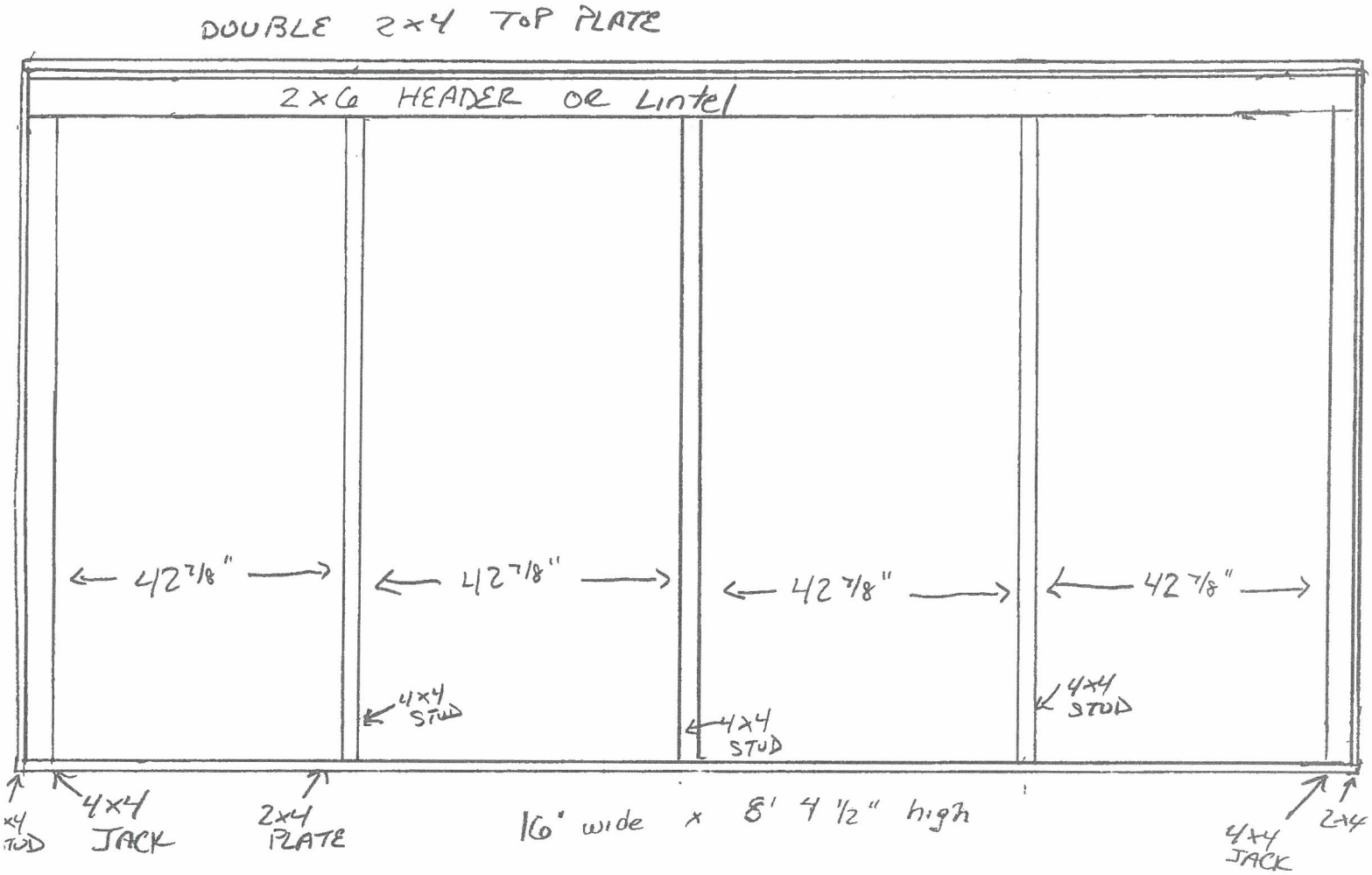

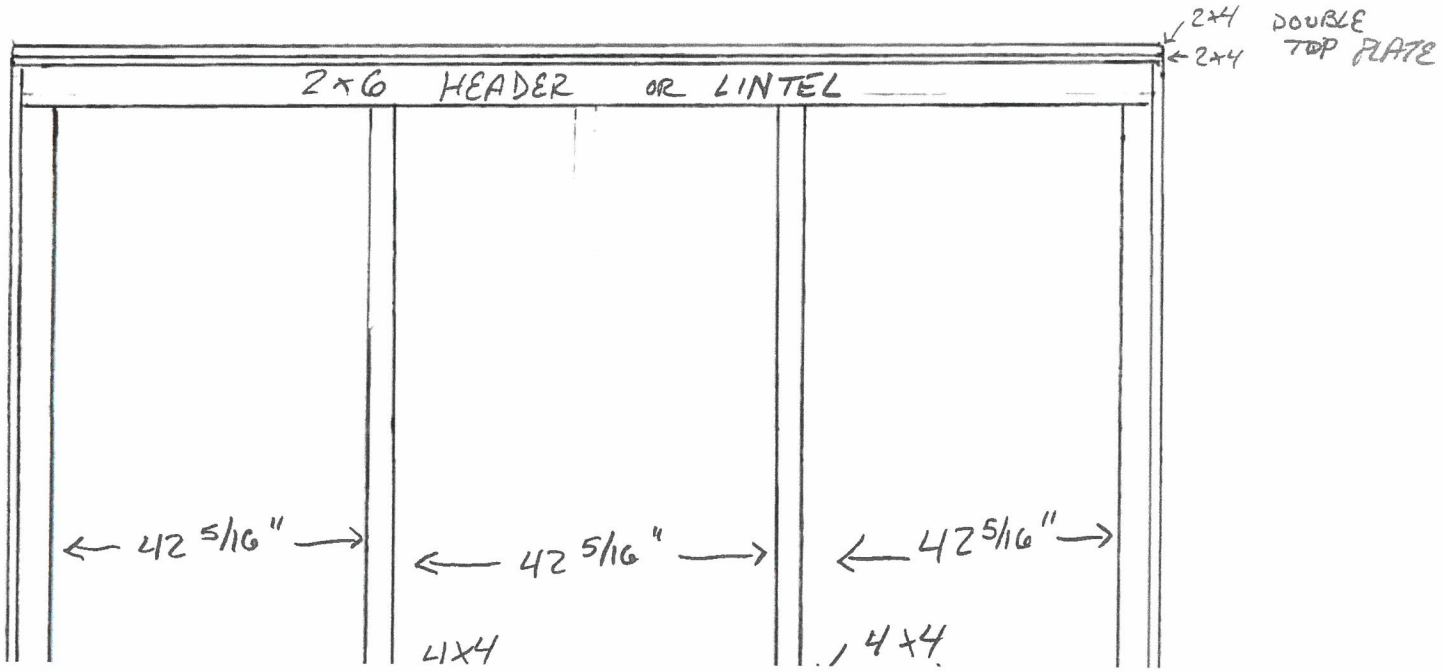

per manufacturers instructions.

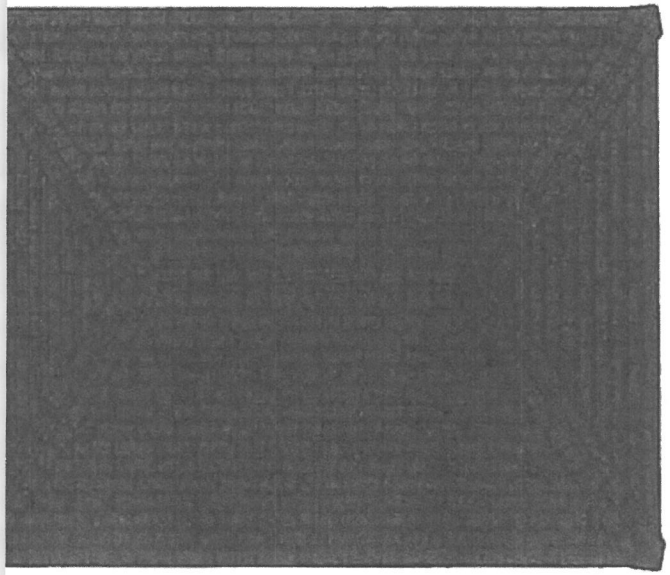

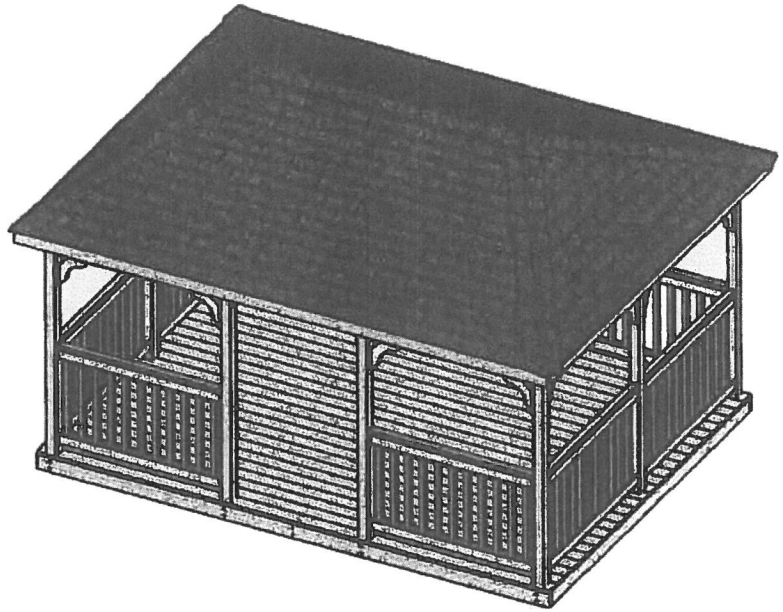

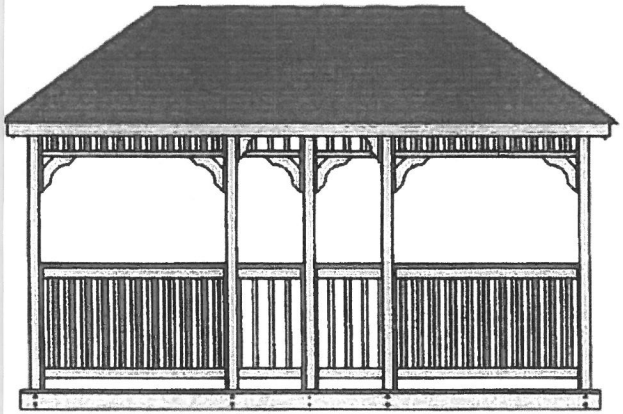

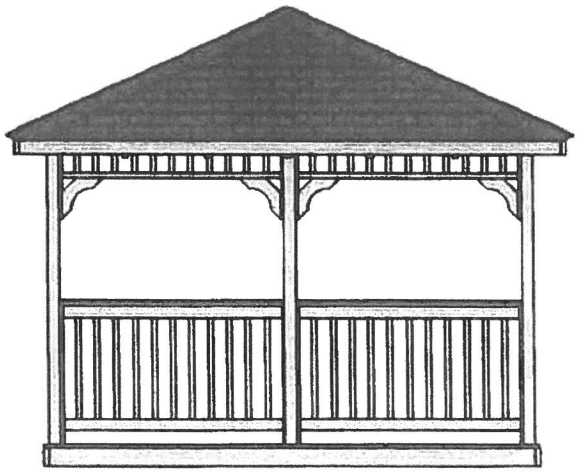

tabbies
EXHIBIT
20-10 G

of Rafter 001 (Item #25) to one of the roof
em #24) as shown below using 3" wood screws
stringer into each rafter. Make two of these.

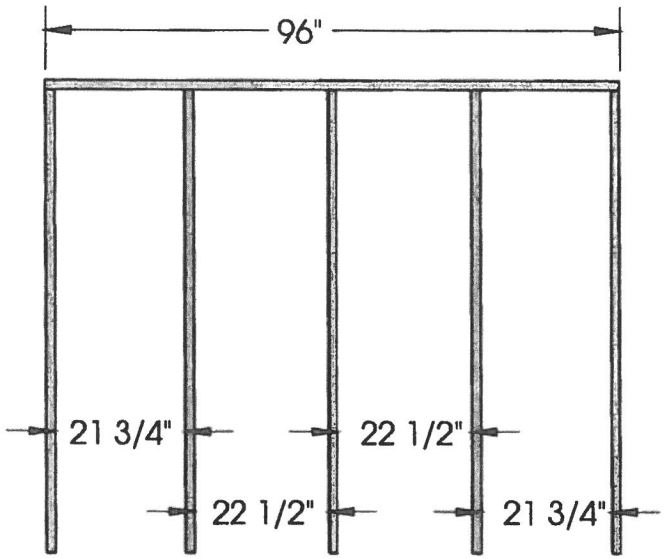

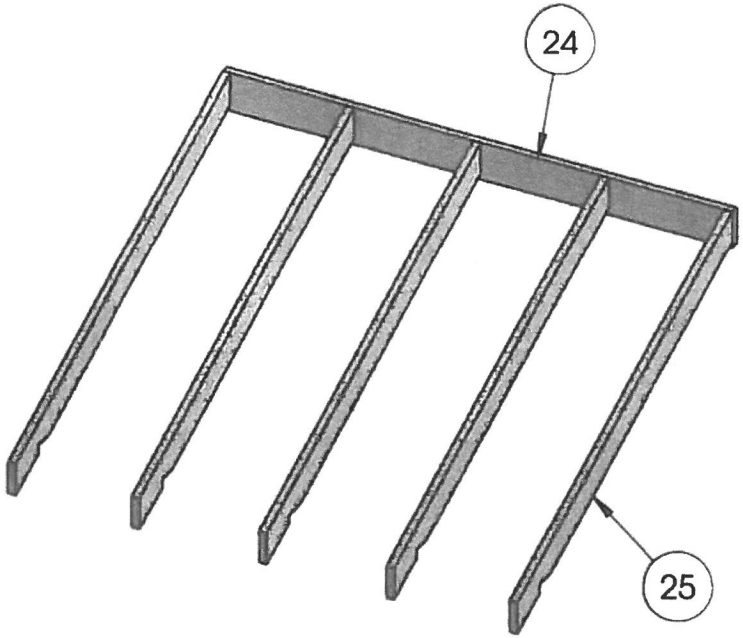

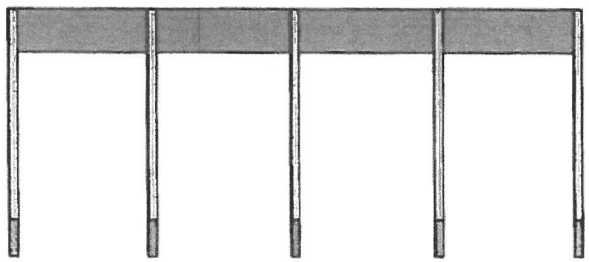

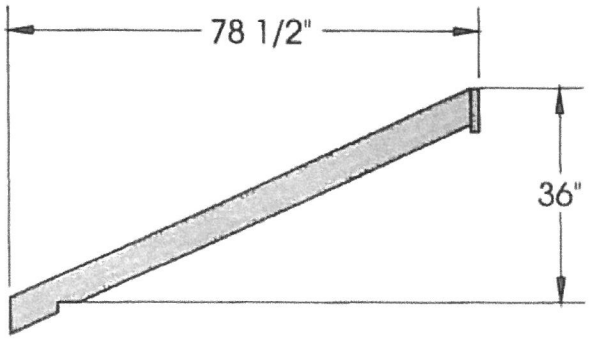

tabbies
EXHIBIT
20-10 H

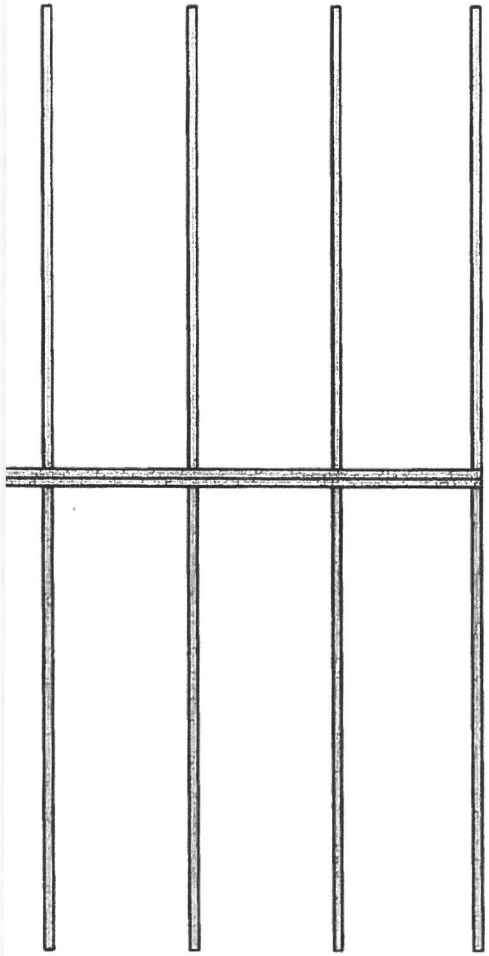

Clamp the two rafter assemblies that you made together and use 3" wood screws to fasten them together.

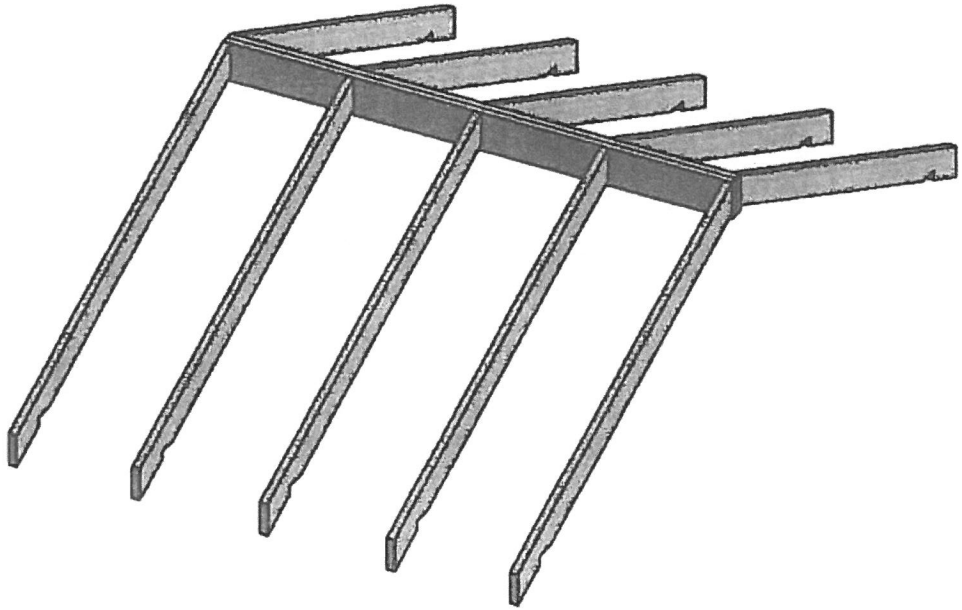

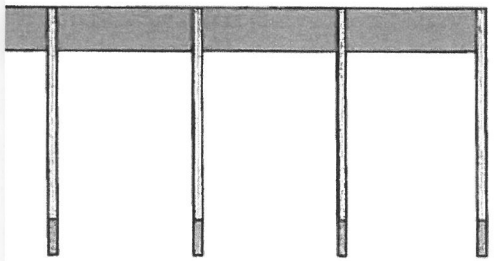

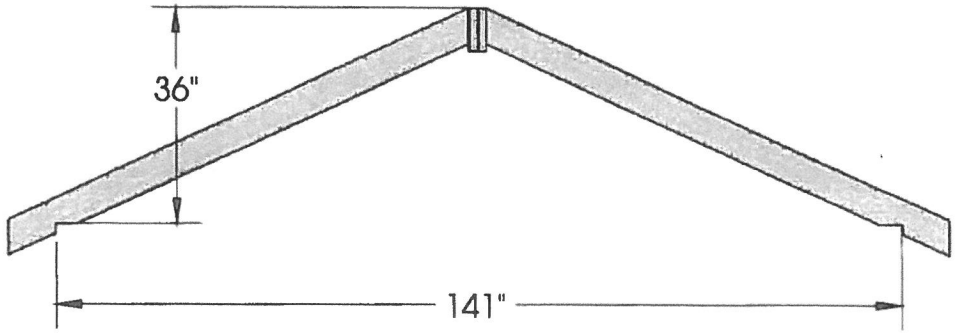

tabbies
EXHIBIT
20-10 I

Put the end rafter assemblies together by starting with Item #26 and screwing Items #28 and 27 to the center block as shown below. Use 3" wood screws. Then attach the hip rafters Items #29 and 30 as shown, use one left and one right of each per assembly. Make two of these.

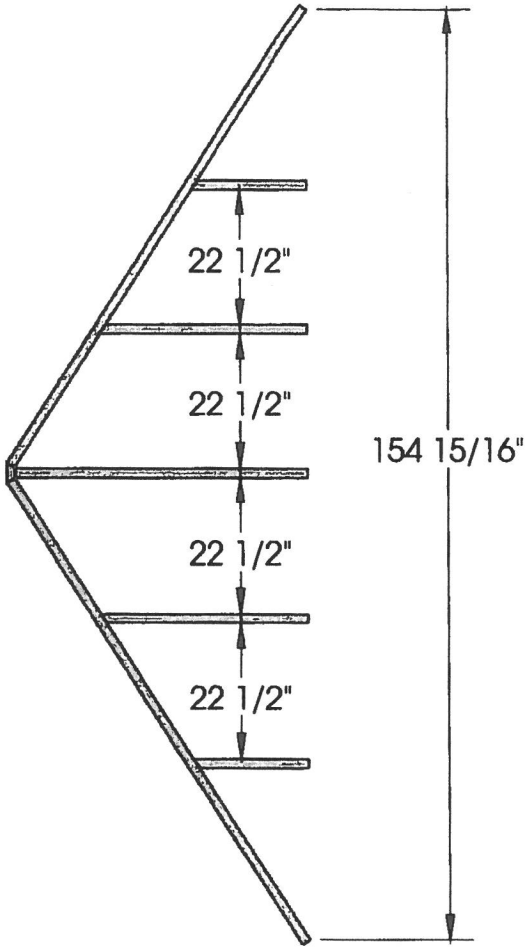

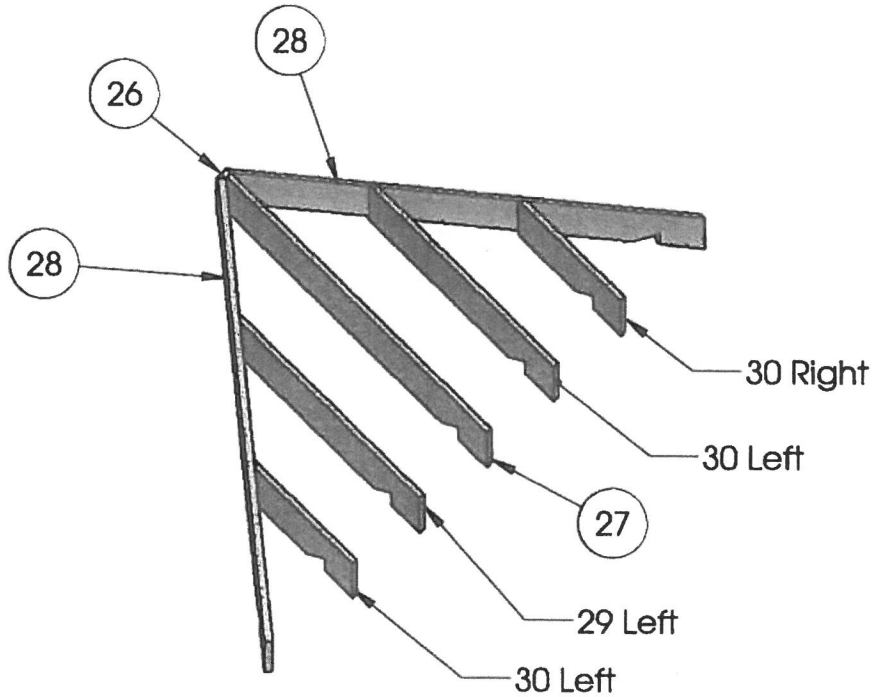

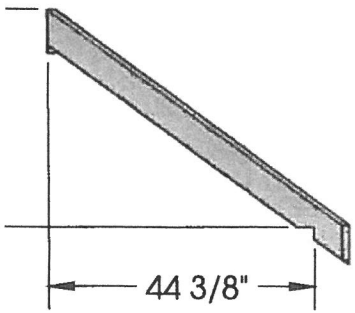

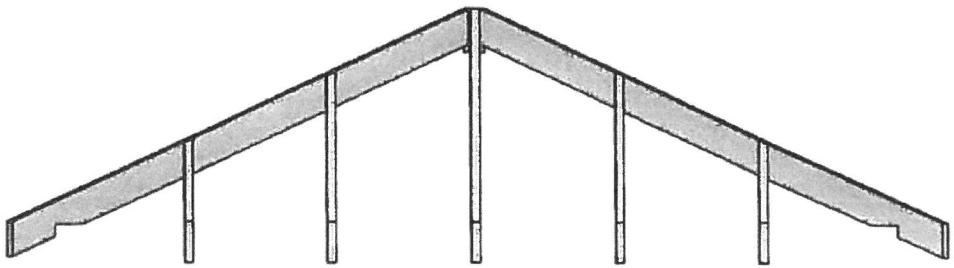

tabbies
EXHIBIT
20-10 J

helpers and lift the center rafter assembly
azebo frame. Make sure that it is centered
e and the rafters are straight and fasten it
e by driving 3" wood screws through each
angle into the top of the frame.

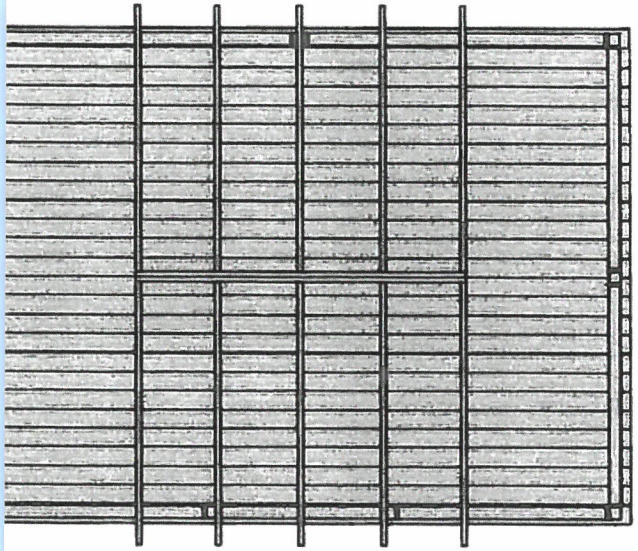

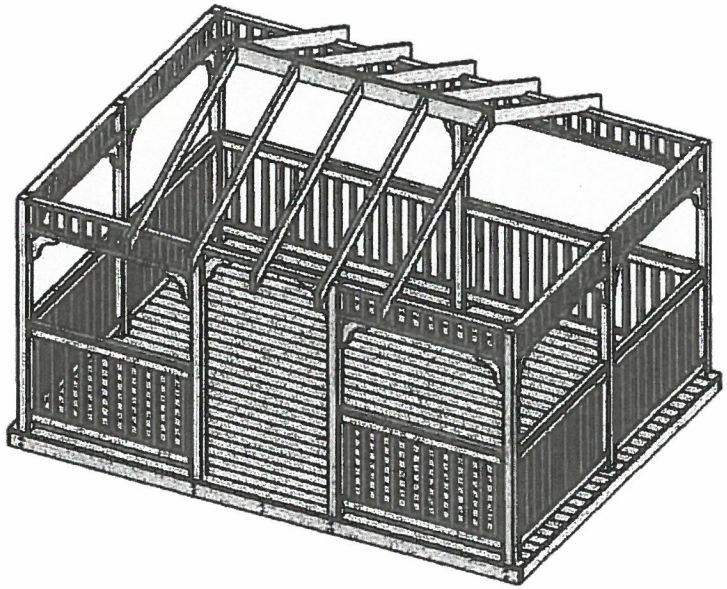

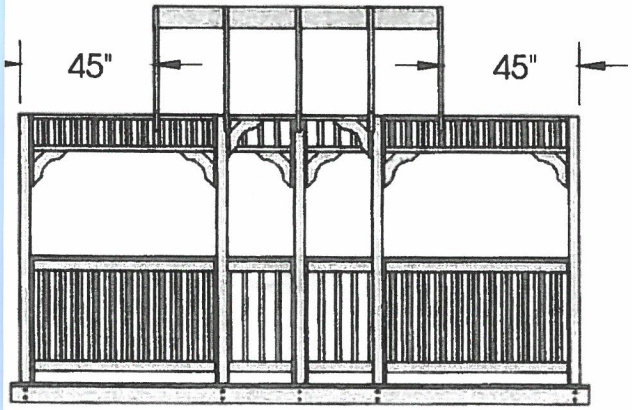

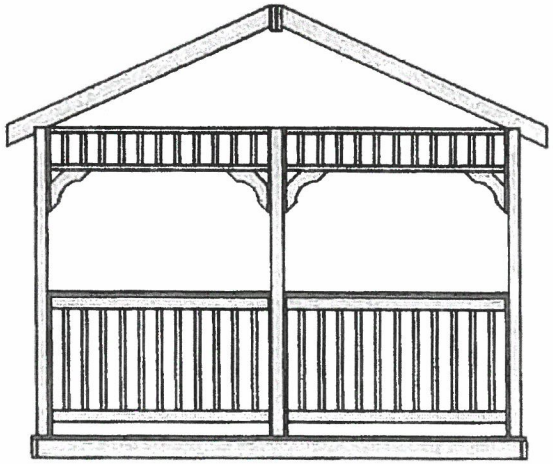

EXHIBIT
20-10 K

elpers help lift the end rafter assemblies onto the
azebo frame and fasten the same way as the center
ply. Screw the end rafters to the center rafters at the

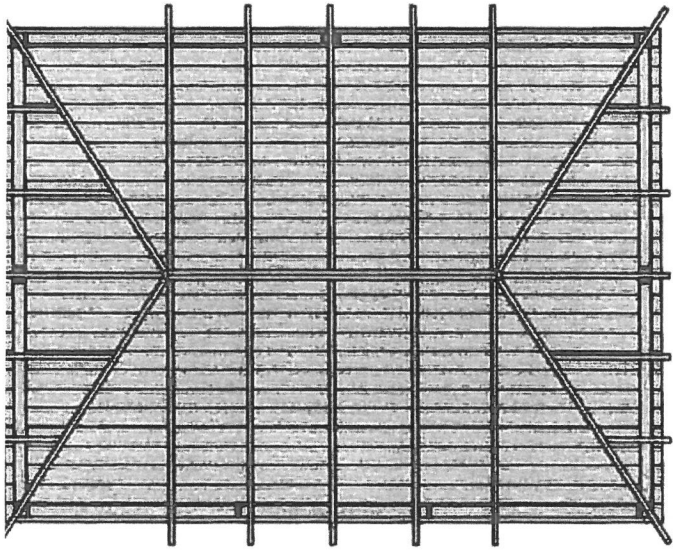

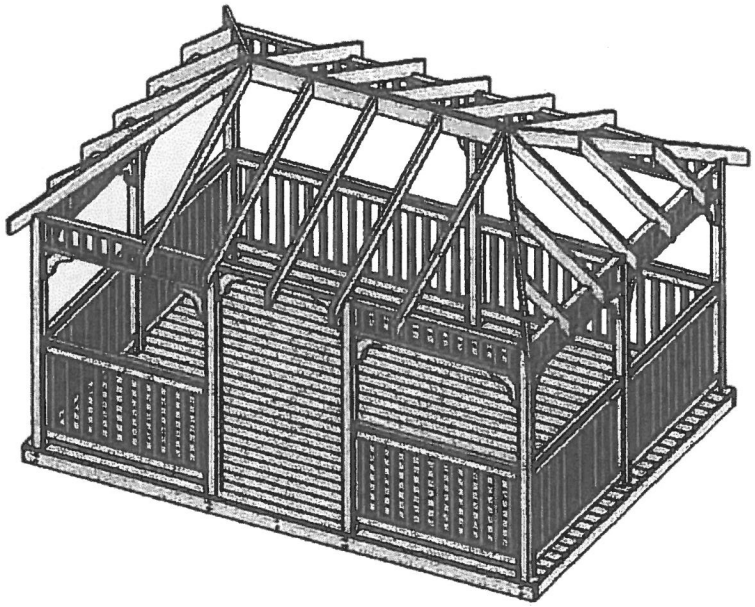

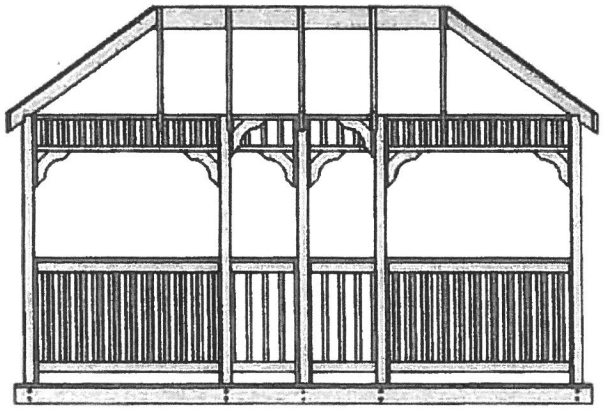

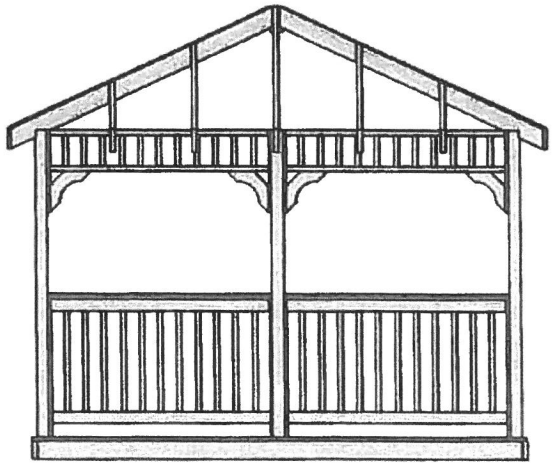

tabbies
EXHIBIT
20-10 7

final hip rafters (Item #31) as shown and secure
:ebo frame and end rafter using 3" wood screws.

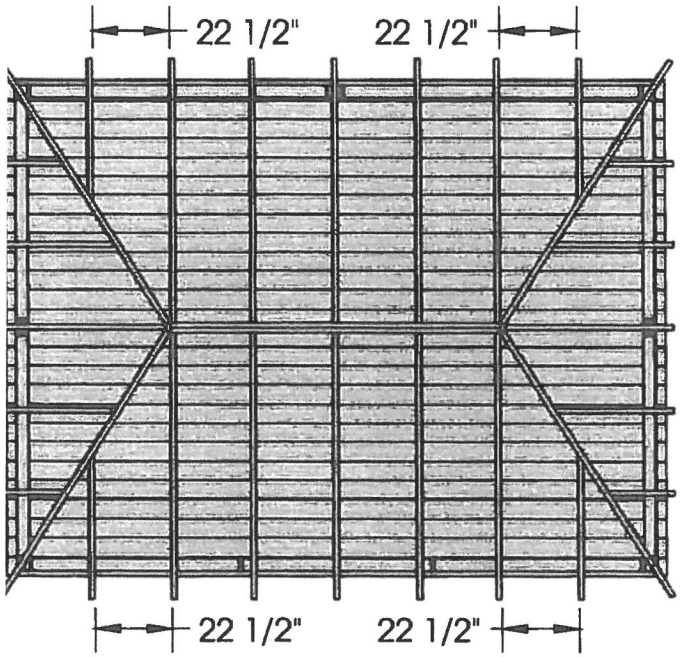

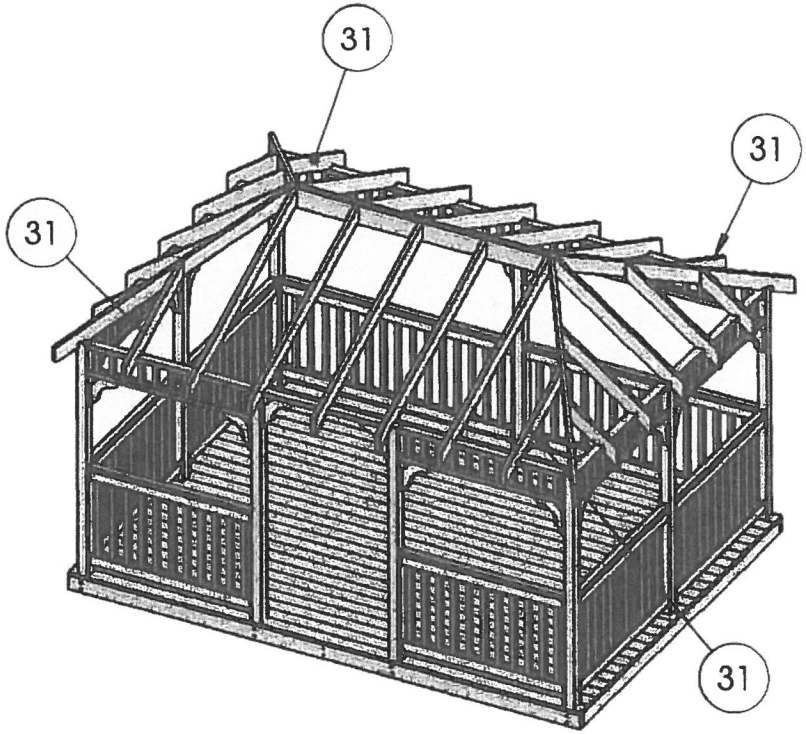

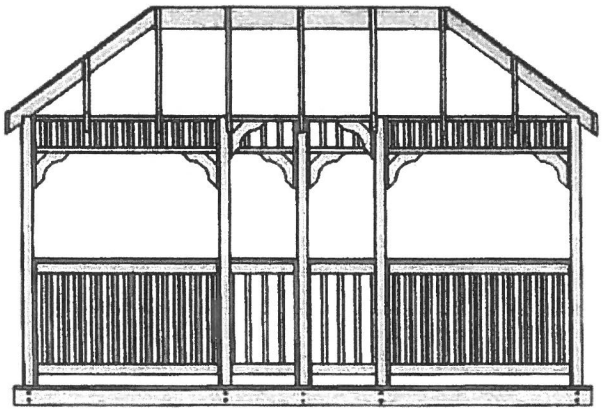

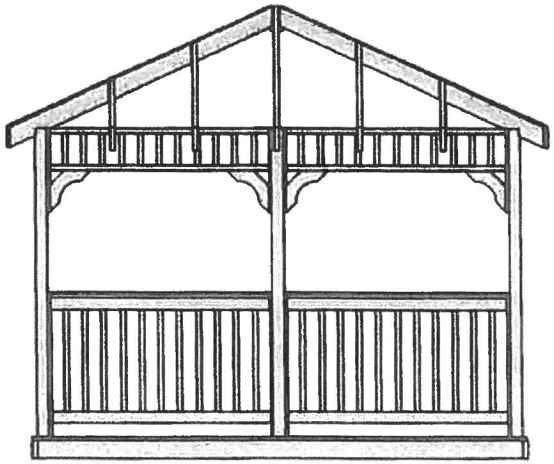

tabbies
EXHIBIT
80-10 M

rim boards (Items #32 & 33) as shown below
em to the end of each rafter with 3" wood

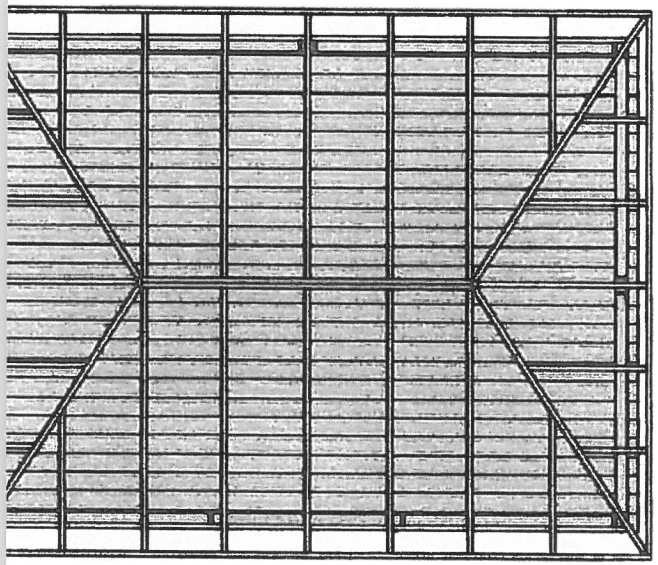

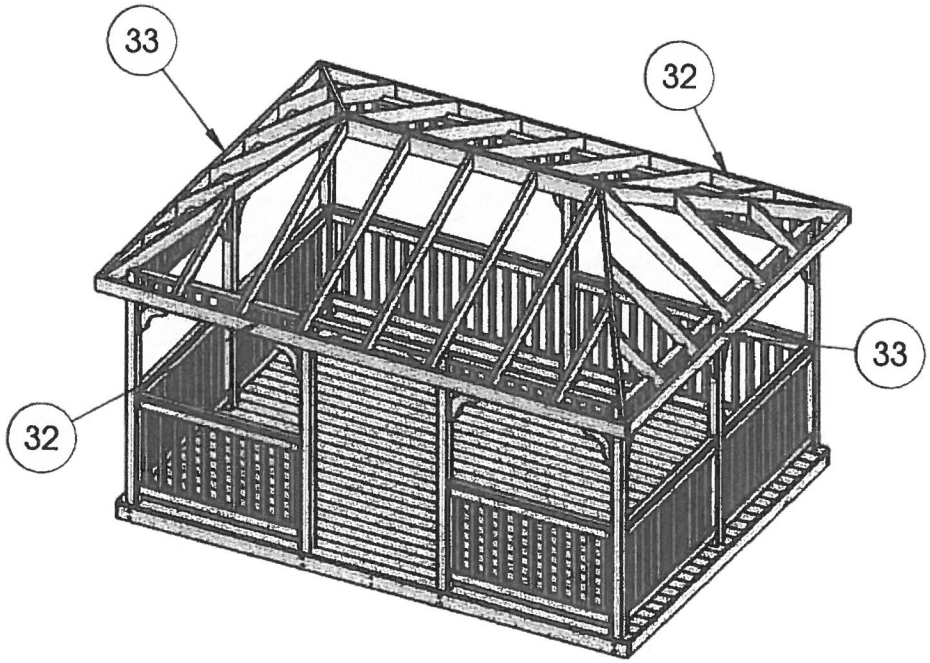

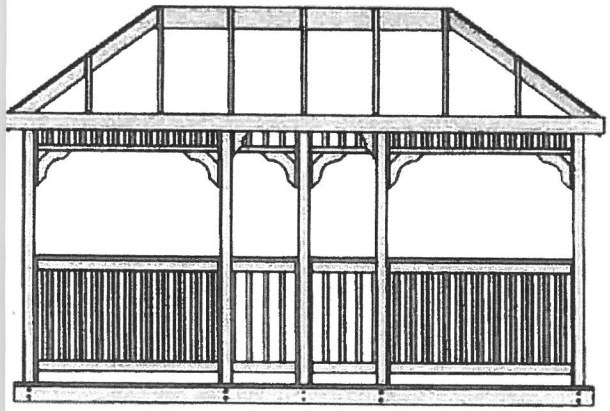

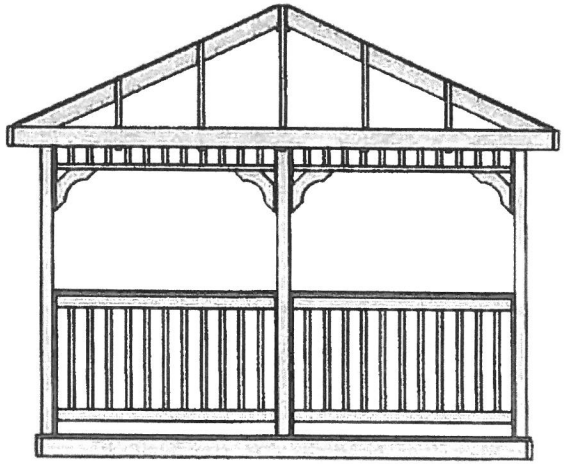

tabbies
EXHIBIT
20-10 N

EXHIBIT

tabbies

20-10 0

20170929-0050677
Pages: 3 F: $78.00
09/29/17 01:28:17 PM
T20170034233
Michael E. Kozikowski
New Castle Recorder DEE

Tax Parcel No. 19-001.00-030

PREPARED BY : Roger L. Truemper
Baird Mandalas Brockstedt, LLC
2961 Centerville Road, Ste. 310
Wilmington, DE 19808

RETURN TO: Thomas Jerry Manuel, Jr. and Kayci Mae Manuel
109 Washington Avenue
Elsmere AKA Wilmington, DE 19805

17173-0138

THIS DEED, made this 6th day of September, 2017,

Between:

THOMAS JERRY MANUEL, JR, party of the first part,

AND

THOMAS JERRY MANUEL, JR., AND KAYCI MAE MANUEL, parties of the second part,

WITNESSETH:

That the said party of the first part, for and in consideration of the sum of **TEN AND 00/100 DOLLARS ($10.00)** lawful money of the United States of America, and other good and valuable consideration, the receipt whereof is hereby acknowledged, hereby grants and conveys unto the said party of the second part, his heirs, successors and assigns, as tenants by the entirety

All that lot, piece or parcel of land with the buildings thereon, situate in the Town of Elsmere, New Castle County, Delaware being known as 109 Washington Avenue, and being now more particularly described by A.E.S. Surveyors as follows, to wit:

Beginning for the same at a point on centerline of Washington Avenue, 50 feet wide, said point being a common point for this lot and lands now or formerly of William A. Dougherty and further said point being distant North 40°45'00" West, 404.18 feet from the point of intersection connecting the centerline of Washington Avenue with the centerline of Spruce Avenue, 70 feet wide, thence from said, point and place of beginning for the lands herein described as follows, to wit:

1. South 49°13'30" West, passing over an iron pipe found at a distance of 25.00 feet, total distance 187.71 feet by the line of the previously mentioned lands now or formerly of William A. Dougherty to a point on the line of lands now or formerly of Thomas J. and Carol A. Manuel,

EXHIBIT
tabbies
20-10 P

2. North 40°45'00" West, 60.00 feet to a point, thence;

3. North 42°30'35" West, 5.00 feet to a point, thence in part continuing by the same and in part by the line of lands now or formerly of Mark A. and Elainamari Franzone;

4. North 49°13'30" East, 187.86 feet to a point on the centerline of Washington Avenue, thence thereby;

5. South 40°45'00" West, 65.00 feet to the point and place of beginning and containing within these metes and bounds 12,209 square feet of land more or less.

SUBJECT TO Notes, Easements, Restriction (if any) as depicted in Microfilm Record No. 570, in the Office of the Recorder of Deeds in and for New Castle County, Delaware.

BEING the same lands and premises which were conveyed unto Thomas Jerry Manuel, Jr. by deed of Carol Ann Manuel, dated September 6, 2017, and recorded in the Office of the Recorder of Deeds in and for New Castle County, Delaware, in Deed Instrument No. 20170908-0046333.

SUBJECT FURTHER TO ALL other covenants, conditions, restrictions, plans and easements of record with respect to the property described above, this reference to which shall not be construed to reimpose any such covenants, conditions, restrictions, plans and easements of record which have otherwise lapsed, expired or have otherwise been terminated in accordance with their terms or otherwise as applicable.

EXHIBIT
20-10 Q

IN WITNESS WHEREOF, the said party of the first part has hereunto set his hand and seal.

SIGNED, SEALED AND DELIVERED
IN THE PRESENCE OF:

Witness

(Seal)
Thomas Jerry Manuel, Jr.

Grantee's Mailing Address:

109 Washington Avenue
Elsmere AKA Wilmington, DE 19805

STATE OF DELAWARE)
): S.S.
COUNTY OF NEW CASTLE)

BE IT REMEMBERED, that on this 6th day of September, 2017, came before me, the Subscriber, a Notary Public in and for the State and County aforesaid, Thomas Jerry Manuel, Jr., party to this Indenture, known to me personally to be such, and acknowledged this Indenture to be his act and deed.

GIVEN under my Hand and Seal of office, the day and year aforesaid.

(Seal)
Notary Public or Notarial Officer
Print Name:
My Commission Expires:

ROGER L. TRUEMPER
ATTORNEY AT LAW
State of Delaware
Notarial Officer Pursuant to
29 Del.C. § 4323(a)(3)

THE TOWN OF ELSMERE
INCORPORATED FEB. 9TH 1909
DELAWARE

No. 17-132
Amount $ EXEMPT

EXHIBIT
20-10 R

Site Analysis
Petition 20-10

Property Owner: Thomas Manuel
Zoning District: R1
Address: 109 Washington Ave
Parcel No.: 1900100030

Primary Use: Residential

LOT COVERAGE CALCULATIONS

Lot Area in Sq. Ft.: 11,500 Sq. Ft.
Allowable Lot Coverage: 3450sq.ft. Sq. Ft. (30 %)

Total Coverage: 2017sq.ft. Sq. Ft. (17 %)

- Residence= 1342 Sq. Ft.
- Front Porch = Sq. Ft.
- Shed= 160 Sq. Ft.
- Impervious= 515 Sq. Ft.
- Rear Patio= Sq. Ft.

Proposed Addition: 192 sq. ft. Sq. Ft.

Proposed Total: 2209 sq.ft. Sq. Ft. (19 %)

Conclusion:

The applicant seeks to add a 12' x 16' covered deck in the rear yard of the residence

Required Setbacks: Front: 20' Rear: 30'
Side: 5' Both Sides: 10'

Existing Setbacks: Front: 49' Rear: 91.1'
Side: 6.1' Both Sides: 16.9

Proposed Setbacks: Front: 49' Rear: 75.1'
Side: 6.1' Both Sides: 16.9'

Conclusion:

The applicant seeks to reduce the rear yard setback by 16', the proposed setback of 75.1' is compliant with the code of the Town of Elsmere.

EXHIBIT
tabbies
20-10 S

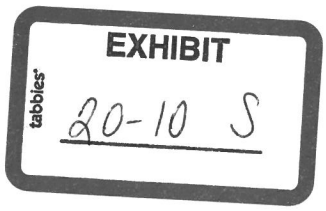

STATEMENT OF FACT

The subject parcel is compliant with the code of the Town of Elsmere.

REQUEST BY THE APPLICANT

The Applicant seeks to add a 12' x 16' covered deck in the rear yard of the property.

ISSUE(S)

The Town of Elsmere's NPDES Permit requires that the Town increase "Green Space" within its corporate limits.

GRANTING OF THE PETITION

1. The Town of Elsmere Planning Commission shall review and determine that the applicants request meets the intent & requirements of The Town of Elsmere's NPDES Permit.
2. The applicant shall be required to obtain a permit from the Town of Elsmere's Code Department within one year of this approval.

EXHIBIT
tabbies
20-10 T

Parcel # 1900100030

Property Address: 109 WASHINGTON AVE
WILMINGTON, DE 19805-
Subdivision: OAK GROVE
Owner: MANUEL THOMAS JERRY JR & KAYCI MAE
Owner Address: 109 WASHINGTON AVE
WILMINGTON, DE 19805
Municipal Info: Incorporated in ELSMERE PROPERTY TAX AREA

Lot #:
Location:
Map Grid: 09603560
Block:
Census Tract: 123.00
Street Type: NEIGHBORHOOD
Water: PUBLIC
Microfilm #: 000570

Property Class: RESIDENTIAL
Lot Size: 0.24
Lot Depth: 162.70
Lot Frontage: 65
Street Finish:

District & Zoning Info

Districts

- **FIRE/RESCUE - ELSMERE**
- **RED CLAY SCHOOL DIST-TRES**
- TRAFFIC ZONE T084 (YR2000)
- NORTH OF C&D CANAL
- COUNCIL 1 - KENNETH R WOODS
- ADD REQ PER SEC 10.3.4.4 DSSR
- SEWER DISTRICT NORTHERN-ASMT
- PLANNING 8 - LOWER CHRISTINA
- DE SEN 07-ANTHONY DELCOLLO
- OAK GROVE - Civic Organization - no contact information available
- DE REP 13-JOHN L MITCHELL JR

Zoning

- 19R1 - ONE FAMILY DWELLING

Deed History

Grantee(s)	Deed	Multi?	Sale Date	Sale Amount
MENAQUALE CHARLES F & CAROLI	475 292	N	12/1/1986	$60,000.00
MENAQUALE CAROLINE B	WR130472	N	6/22/2003	$0.00
MANUEL CAROL ANN	20170908 0046333	N	9/6/2017	$10.00
MANUEL THOMAS JERRY JR & KAYCI MAE	20170929 0050677	N	9/6/2017	$10.00
	20170919 0048156	N	9/7/2017	$10.00

Tax/Assessment Info

Assessment

Land:	8300
Structure:	41700
Homesite:	0
Total:	50000
County Taxable:	50000
School Taxable:	50000

Tax Bills as of 5/11/2020 3:01:21 AM

	County			School		
Tax Year	Principal Due	Penalty Due	Amt Paid	Principal Due	Penalty Due	Amt Paid
2010A	$0.00	$0.00	$168.34	$0.00	$0.00	$701.12
2011A	$0.00	$0.00	$61.70	$0.00	$0.00	$693.75
2012A	$0.00	$0.00	$61.87	$0.00	$0.00	$687.00
2013A	$0.00	$0.00	$61.52	$0.00	$0.00	$727.87
2014A	$0.00	$0.00	$61.75	$0.00	$0.00	$740.77
2015A	$0.00	$0.00	$61.53	$0.00	$0.00	$821.50
2016A	$0.00	$0.00	$61.38	$0.00	$0.00	$894.40
2017A	$0.00	$0.00	$61.70	$0.00	$0.00	$947.90
2017Q2	$0.00	$0.00	$54.85	$0.00	$0.00	$0.00
2018A	$0.00	$0.00	$183.54	$0.00	$0.00	$1,230.50
2019A	$0.00	$0.00	$169.96	$0.00	$0.00	$1,239.50

Tax Payments as of 5/11/2020 3:01:21 AM

Date Paid	Amt Paid
9/23/2010	$869.46
9/26/2011	$755.45
9/27/2012	$748.87
9/24/2013	$789.39
9/23/2014	$802.52

EXHIBIT
tabbies
20-10 U

9/23/2015
9/23/2016
9/13/2017
9/13/2017
2/27/2018
9/25/2018
9/23/2019

County Balance Due: $0.00

School Balance Due: $0.00

These amounts are valid through the last day of the month. For accounts with delinquent balances, statutory penalty will accrue on the first day of next month.

Sewer History as of 5/11/2020 3:02:03 AM

Tax Year	Principal Due	Penalty Due	Date Paid	Amount Paid
2005S1	$0.00	$0.00	2/24/2005	$84.37
2006S1	$0.00	$0.00	6/1/2006	$90.68
2007S1	$0.00	$0.00	2/28/2007	$65.07
2008S1	$0.00	$0.00	2/29/2008	$55.77
2009S1	$0.00	$0.00	2/26/2009	$55.77
2010S1	$0.00	$0.00	2/23/2010	$61.35
2011S1	$0.00	$0.00	3/1/2011	$148.89
2012S1	$0.00	$0.00	2/28/2012	$88.40
2013S1	$0.00	$0.00	2/22/2013	$88.40
2014S1	$0.00	$0.00	4/1/2014	$63.14
2015S1	$0.00	$0.00	2/25/2015	$57.40
2016S1	$0.00	$0.00	2/24/2016	$63.14
2017S1	$0.00	$0.00	2/22/2017	$74.62
2018S1	$0.00	$0.00	2/27/2018	$149.25
2018S5	$0.00	$0.00	2/11/2019	$22.96
2019S1	$0.00	$0.00	2/11/2019	$192.88
2020S1	$0.00	$0.00	2/13/2020	$154.30

Balance Due: $0.00

These amounts are valid through the last day of the month. Statutory penalty will accrue on the first day of next month.

Residence Characteristics

Residence 0

Building Design:	RANCH	Residence Class:	SFD PLATTED LOT
Grade:	AVERAGE	Condition:	AVERAGE
Year Built:	1955	# Stories:	1
Total Area (sq. ft.):	1300	Main Floor Area:	1278
# Rooms:	7	# Bedrooms:	3
# 1/2 Baths:	0	# Full Baths:	1
# Fam. Rooms:	1	# Fixtures:	6
Roof Type:	GABLE	Roof Material:	ASPHALT
Exterior Wall:	BRICK	Interior Wall Finish:	DRYWALL
Floor Finish:	WOOD	Foundation:	CONTINUOUS
Garage Capacity:	0	Basement %:	100%
Basement % Finished:		Basement Finish Type:	
Attic % Finished:			
Unfinished %:		Unfinished Area:	0
Heat Type:	HOT AIR	Air Conditioning:	
Remodel Year:	0		

109 Washington Ave

Author:

New Castle County Delaware GIS: http://gis.nccde.org
Disclaimer: For informational purposes only - not to be used as official documentation.

0 0.005

tabbies
EXHIBIT
20-10 V